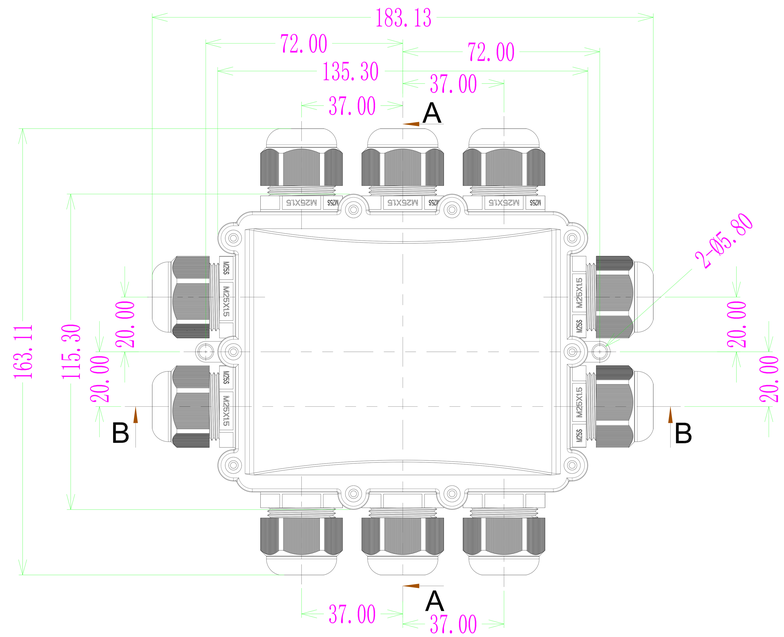

SECTION A-A

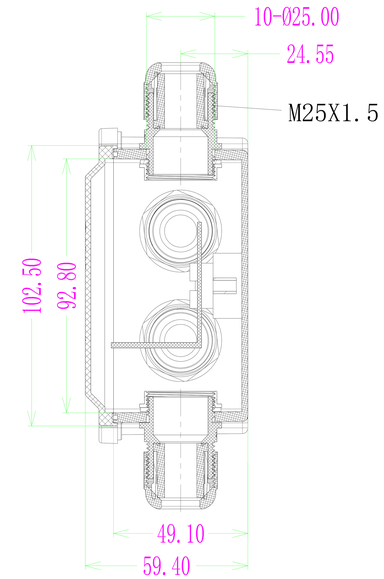

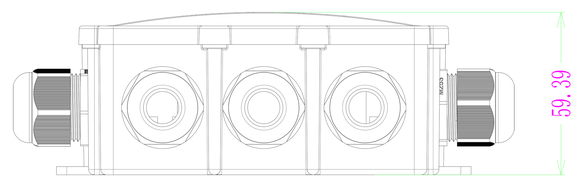

SECTION B-B

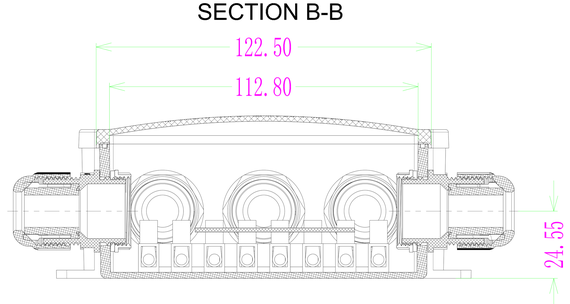

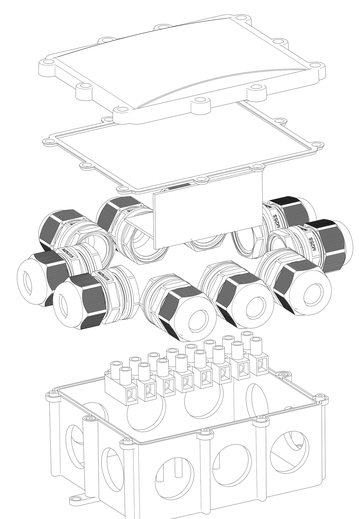

M686 0